CONCEPT SKETCHES

Parts List

Quantity	name
1	work surface
1	clear block
1	front
1	Shelf
2	Chrome pillars

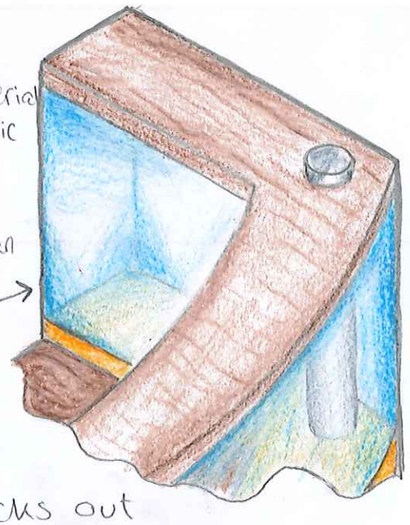

Clear material will be acrylic as it is lighter and cheaper than glass in large amounts

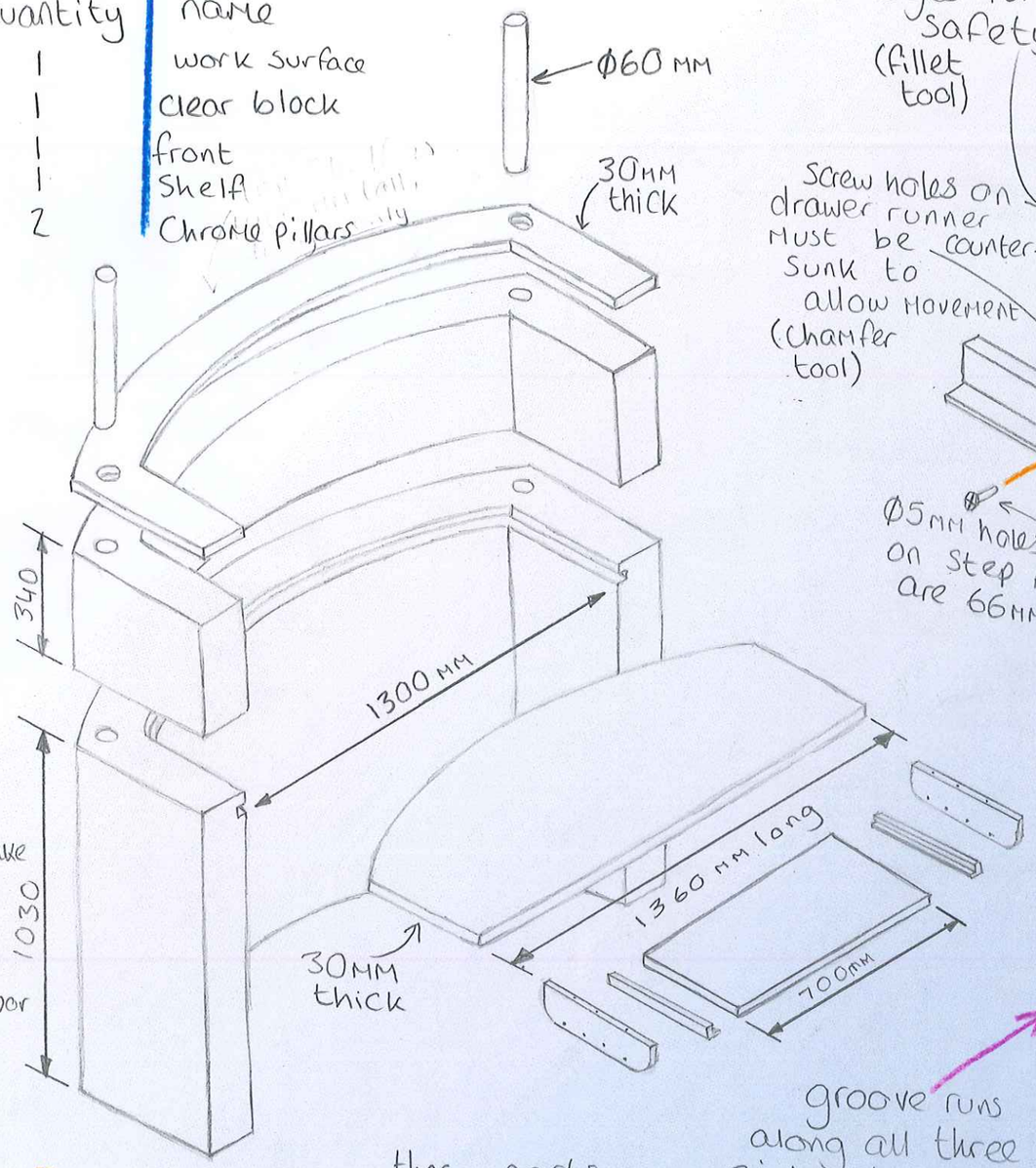

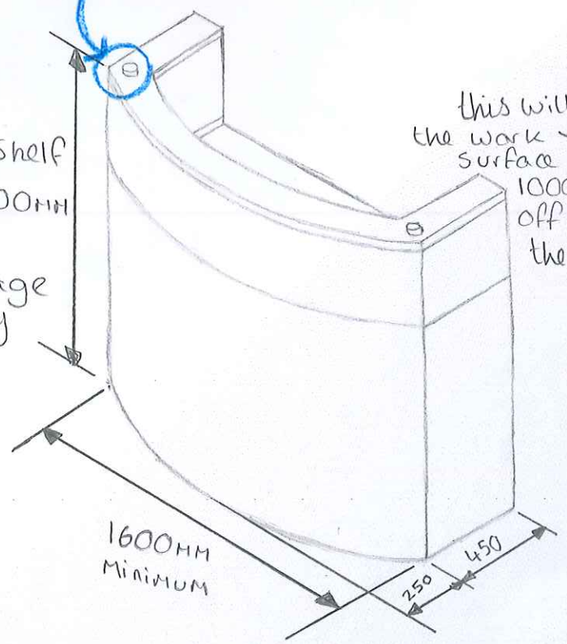

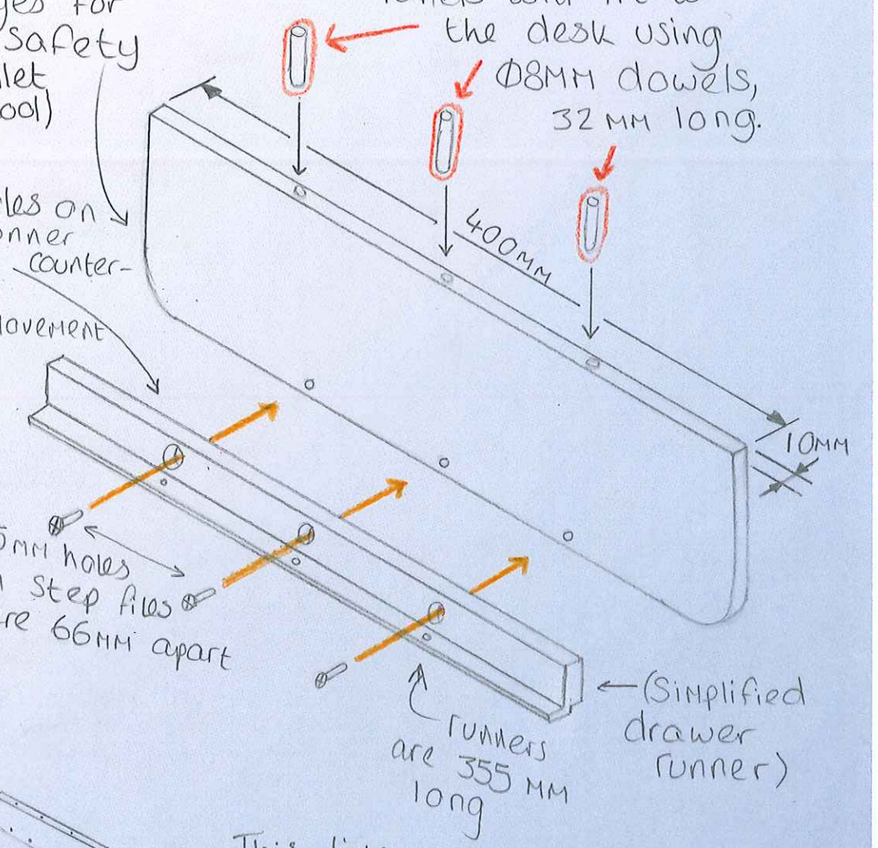

Drawer Parts

Quantity	name
1	drawer base
2	drawer runners
2	drawer sides
6	5MM Screws, 8MM dowels

these parts will be sourced from a CAD library

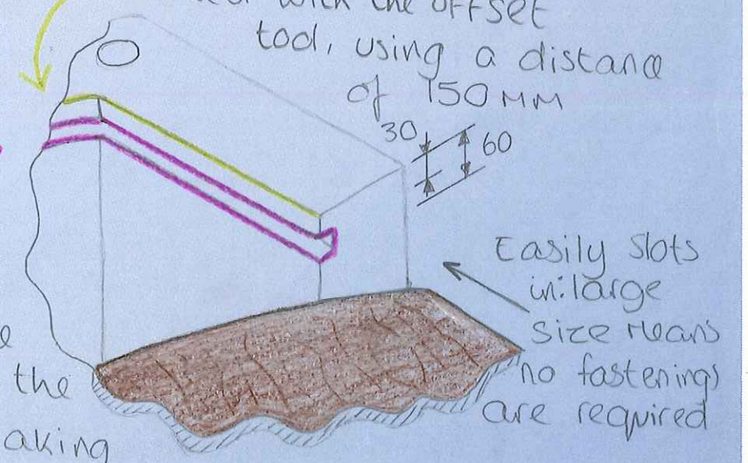

WINDOW:

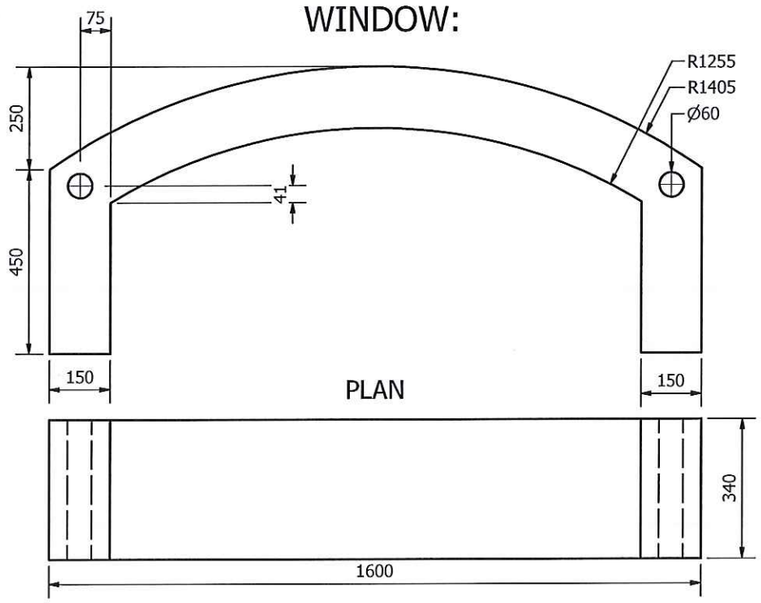

BASE:

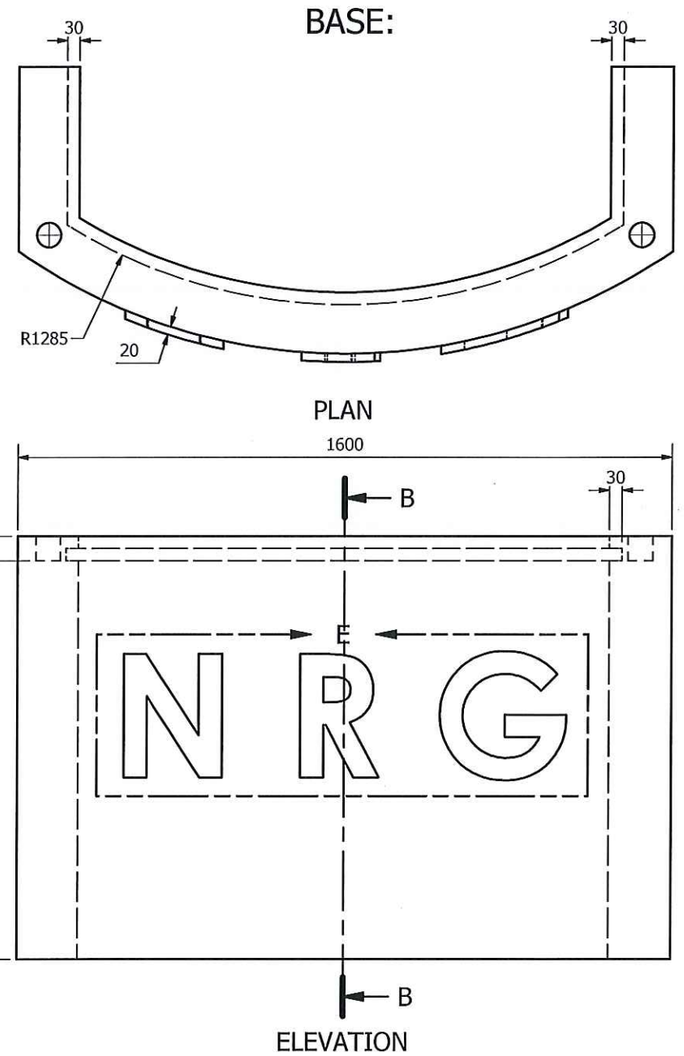

PILLAR:

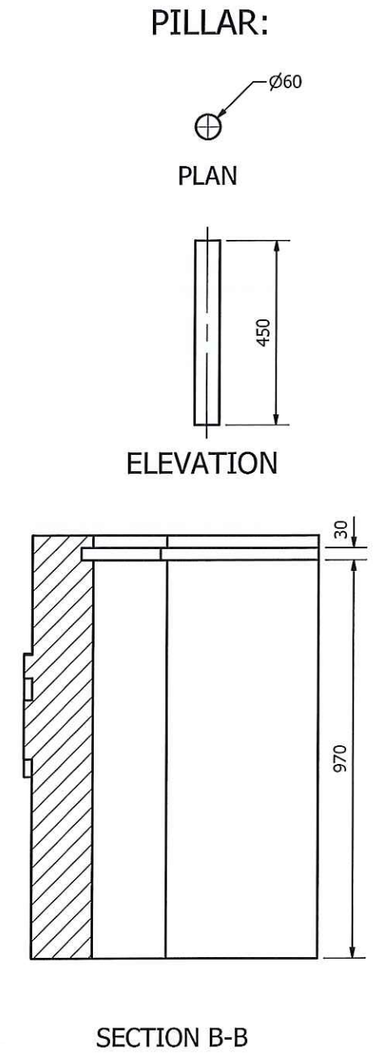

WORK SURFACE:

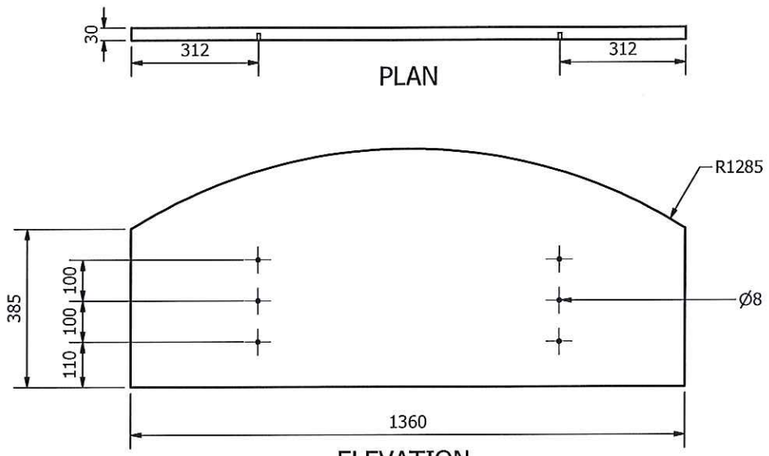

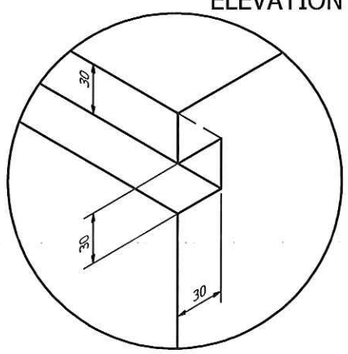

DETAIL OF SLOT
SCALE 1:2

Front face is embossed with **CENTURY GOTHIC** font, using a 20mm extrusion

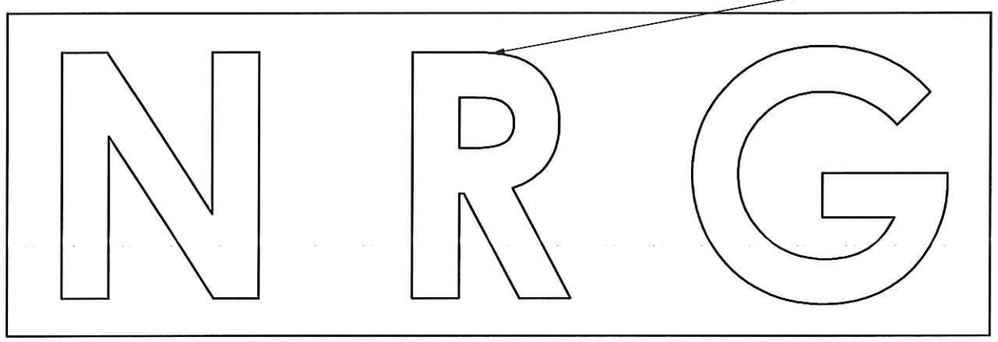

DETAIL OF EMBOSSED TEXT
SCALE 1:5

ADAM COWAN	LESMAHAGOW HIGH SCHOOL
SCALE 1:10	ALL DIMENSIONS IN MM
1/3/16	3RD ANGLE PROJECTION
COMPONENT ORTHOGRAPHICS	

SHELF (SCALE 1:5):

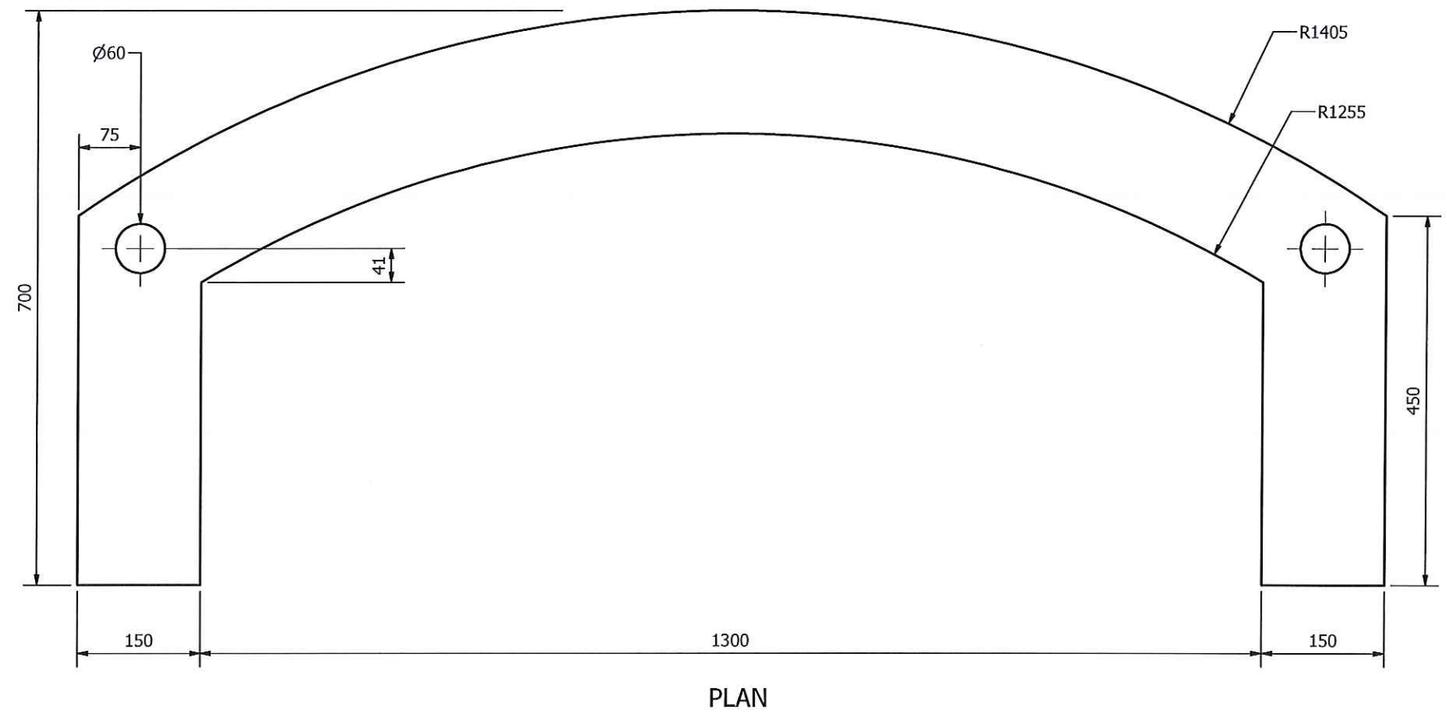

PLAN

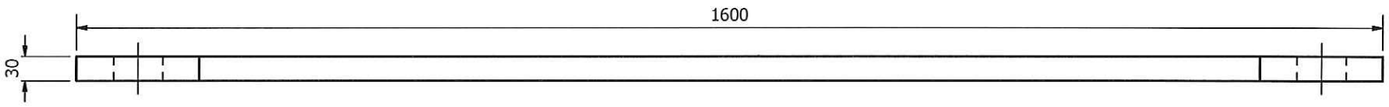

ELEVATION

DRAWER BASE (SCALE 1:5):

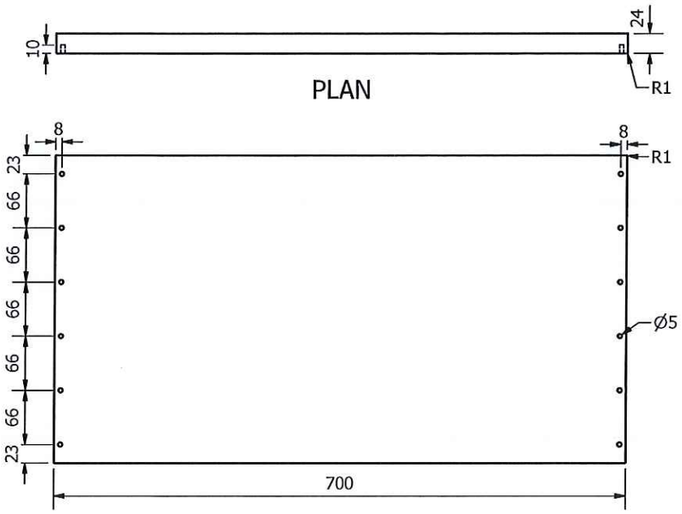

PLAN

ELEVATION

DRAWER SIDE (SCALE 1:4):

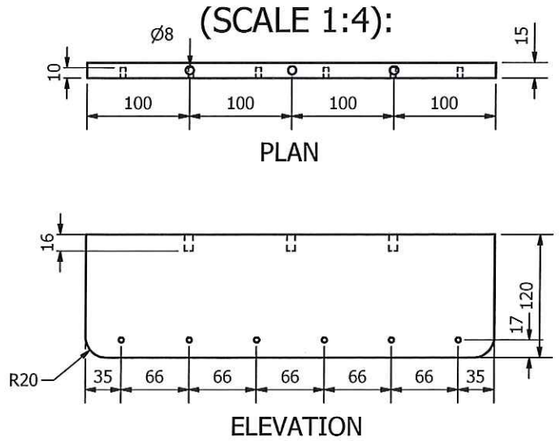

PLAN

ELEVATION

RIGHT DRAWER RUNNER (SCALE 1:1):

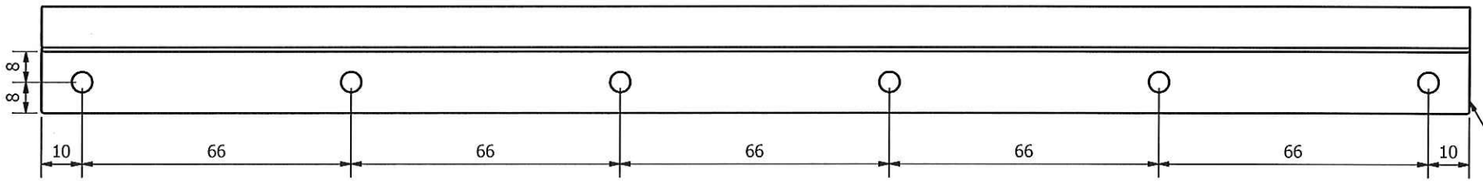

PLAN

LEFT RUNNER IS IDANTICAL BUT MIRRORED

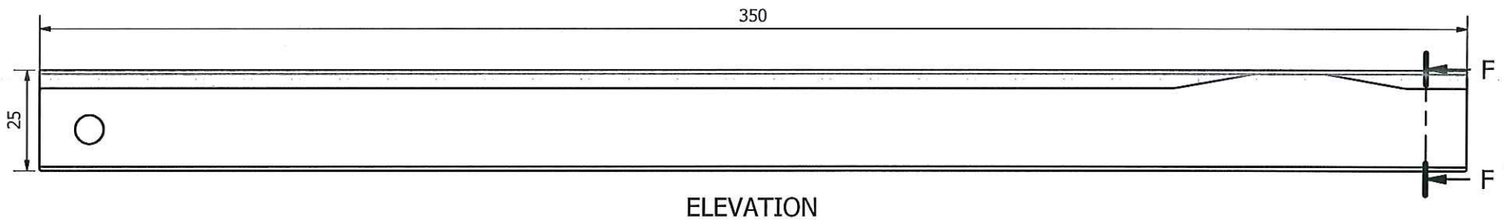

ELEVATION

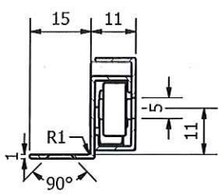

SECTION F-F

ADAM COWAN	LESMAHAGOW HIGH SCHOOL
CAD ORTHOGRAPHICS	ALL DIMENSIONS IN MM
1/3/16	3RD ANGLE PROJECTION
COMPONENT ORTHOGRAPHICS	

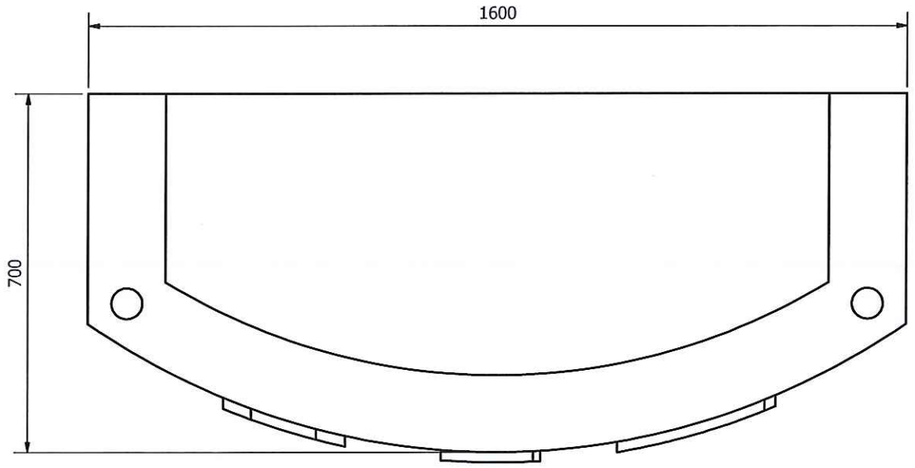

PLAN

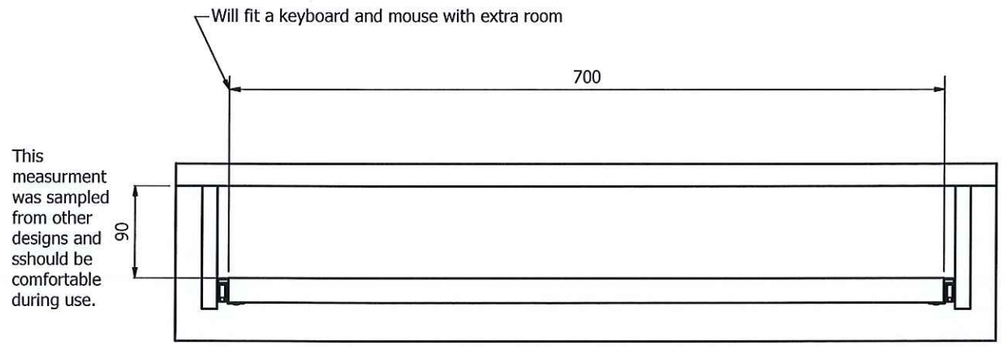

DETAIL OF DRAWER
SCALE 1:4

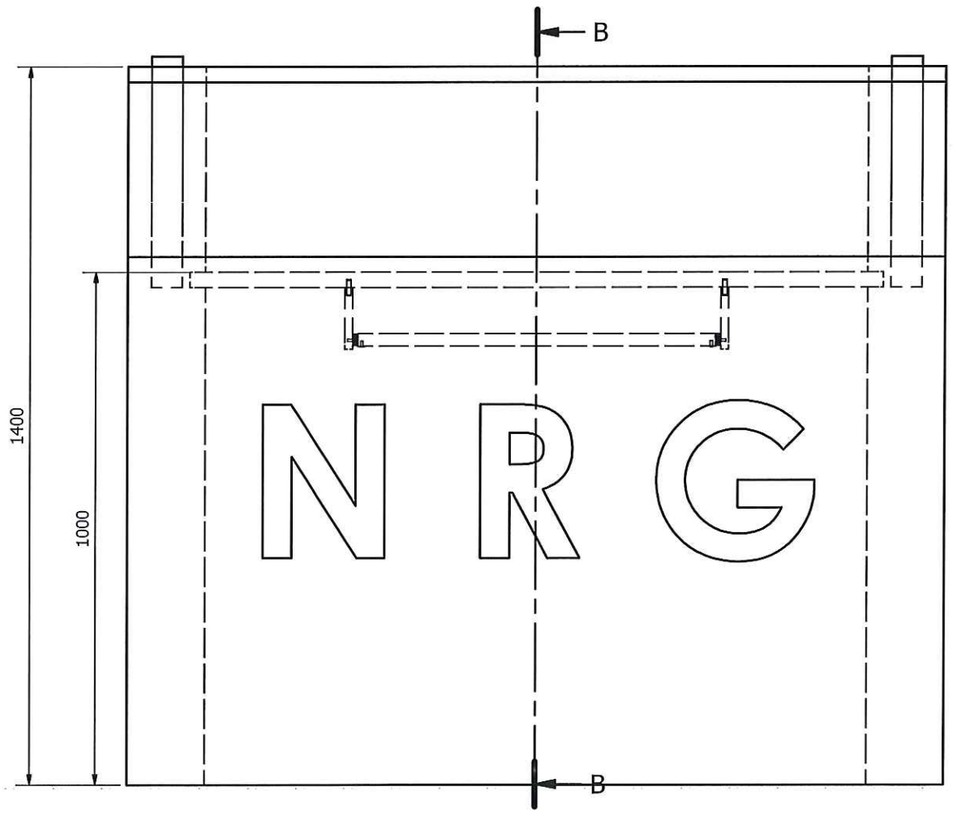

ELEVATION

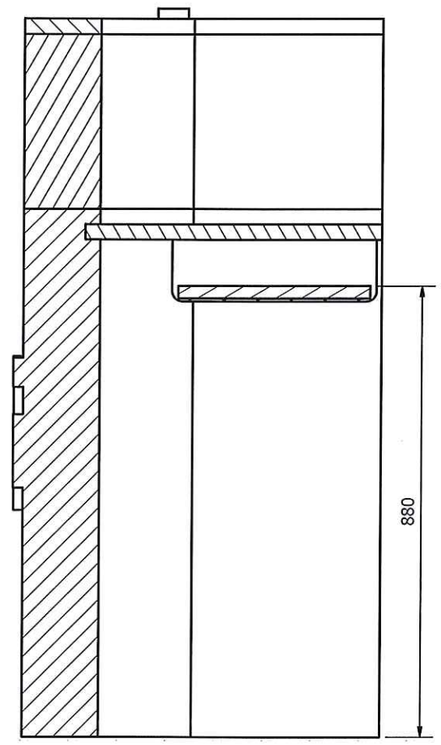

SECTION B-B

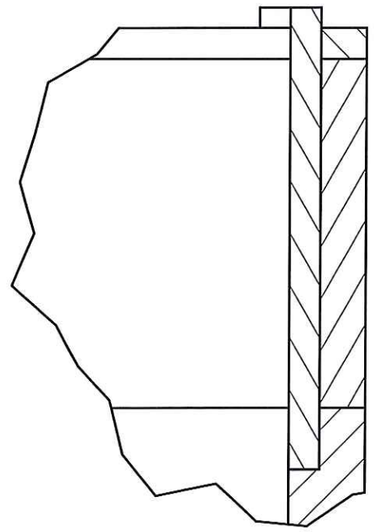

DETAIL OF PILLAR
SCALE 1:4

ADAM COWAN	LESMAHAGOW HIGH SCHOOL
CAD ASSEMBLED ORTHOGRAPHICS	ALL DIMENSIONS IN MM
1/3/16	3RD ANGLE PROJECTION
SCALE 1:8	

FASTENINGS

SCALE 2:1

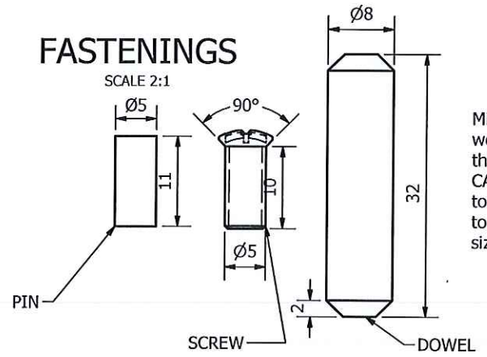

Minor changes were made to these standard CAD library parts to allow a better fit to my design. Key sizes are noted.

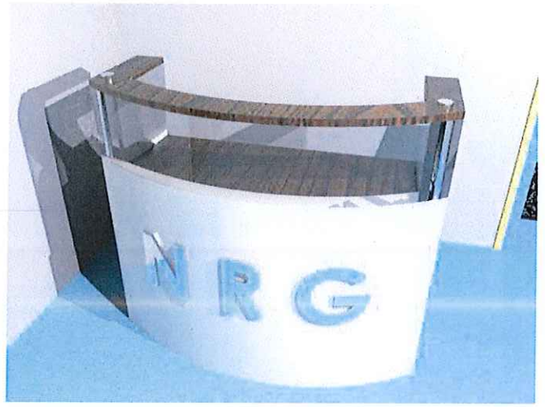

GRAPHIC OF ASSEMBLED DESK

The base, window and shelf share the same profle, to give a seamless front face to the design.

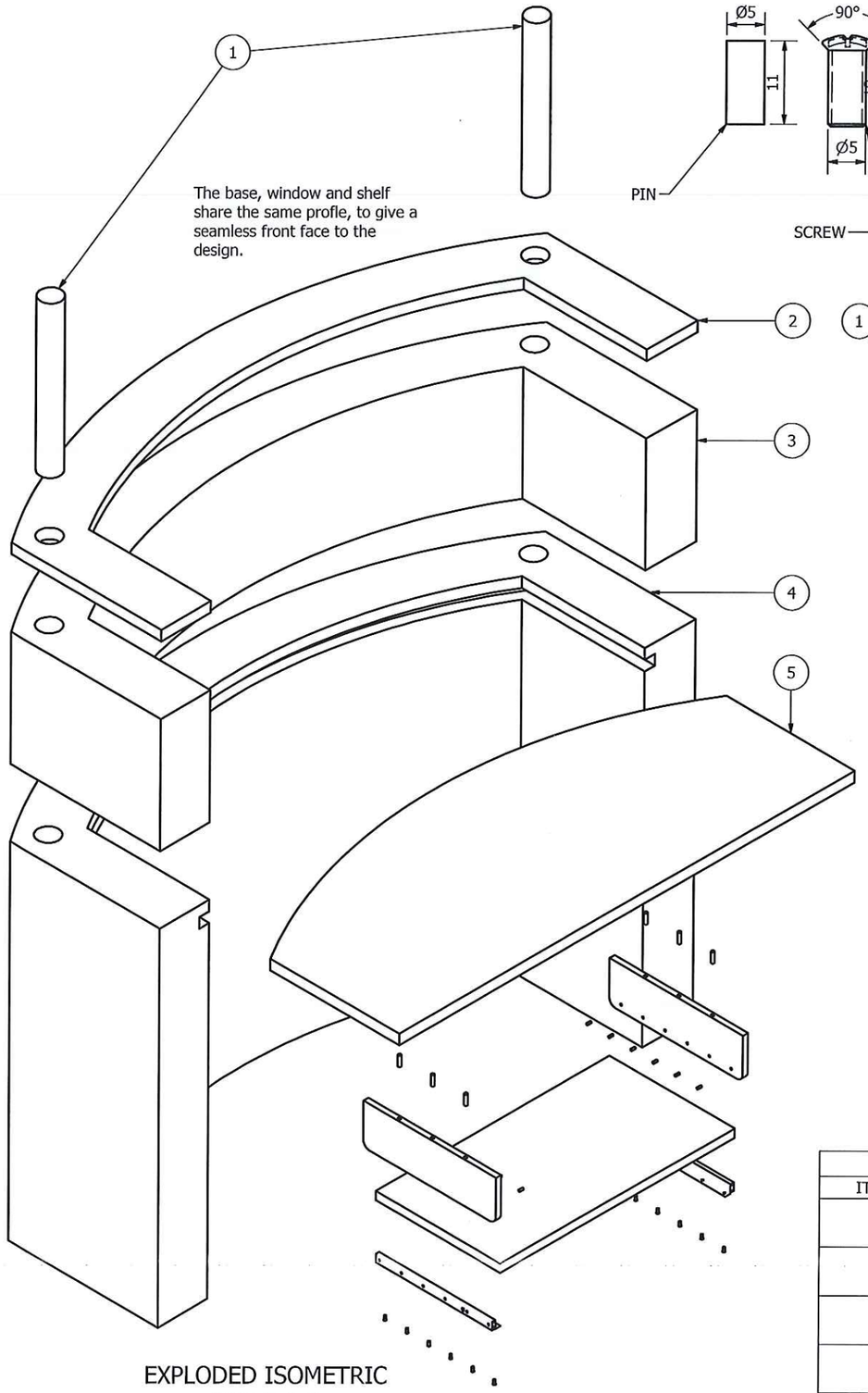

EXPLODED ISOMETRIC
SCALE 1:8

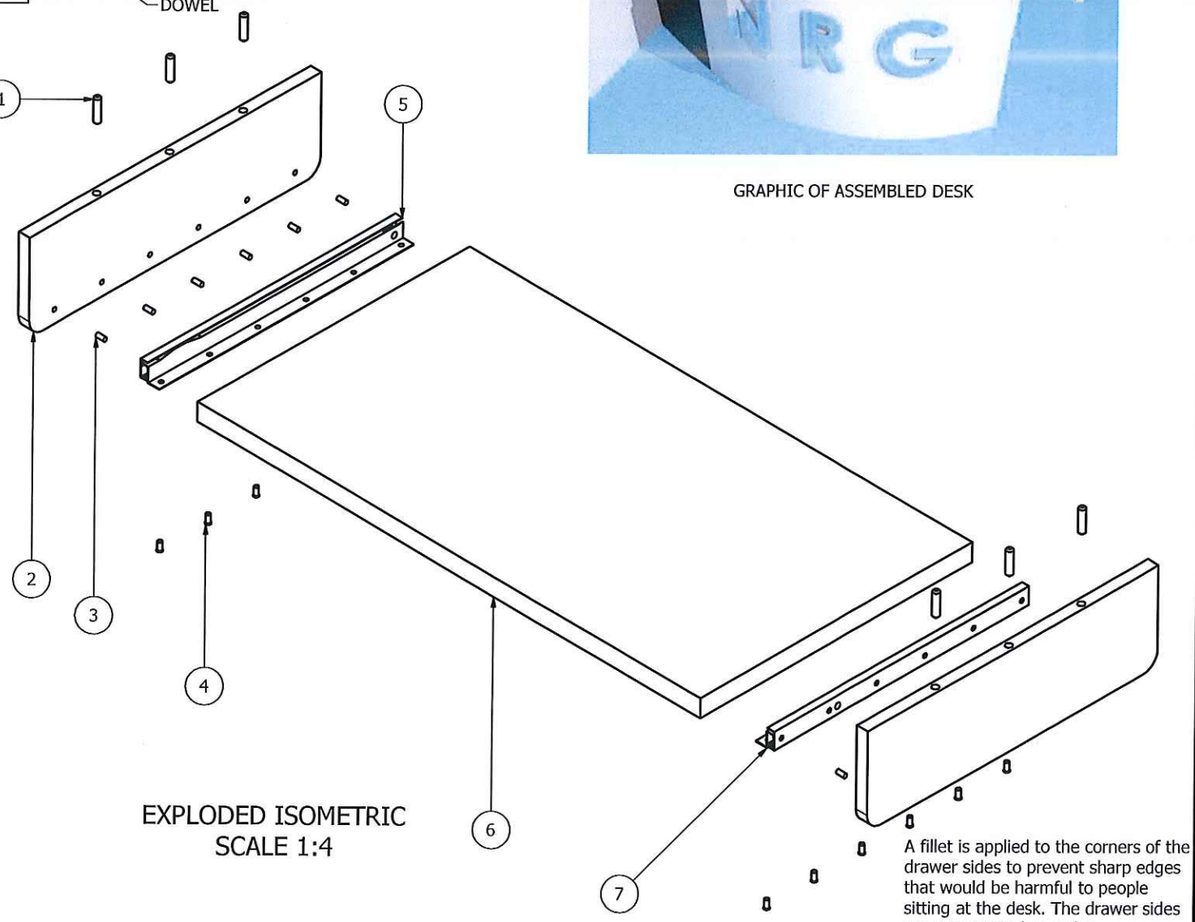

EXPLODED ISOMETRIC
SCALE 1:4

A fillet is applied to the corners of the drawer sides to prevent sharp edges that would be harmful to people sitting at the desk. The drawer sides are symmetrical to make manufacturing and assembly less complex.

PARTS LIST

ITEM	QTY	PART NUMBER
1	2	Chrome Pillar
4	1	Front
2	1	Shelf
3	1	Window
5	1	Work Surface

PARTS LIST

ITEM	QTY	PART NUMBER
5	1	Left Bracket
6	1	Drawer Base
2	2	Drawer Side
7	1	Right Bracket
1	6	Dowel
4	12	Screw
3	12	Drawer Pin

ADAM COWAN	LESMAHAGOW HIGH SCHOOL
CAD PICTORIALS	ALL DIMENSIONS IN MM
1/3/16	3RD ANGLE PROJECTION
EXPLODED RECEPTION DESK	

MODELLING TECHNIQUES

3D ARRAY

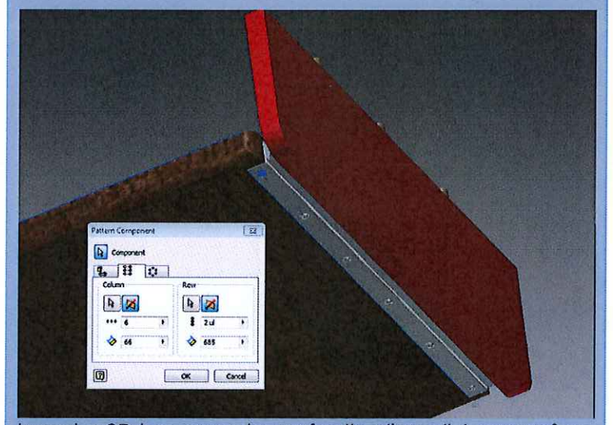

I used a 3D box array to perfectly align all 6 screws fastening my drawer runners.

EMBOSS

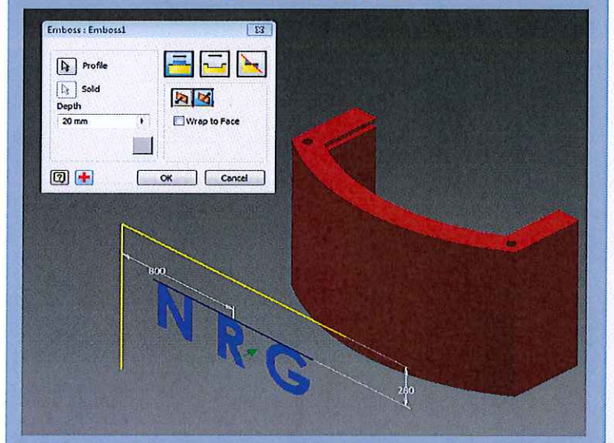

I embossed the century gothic typeface to my desk front.

2D ARRAY

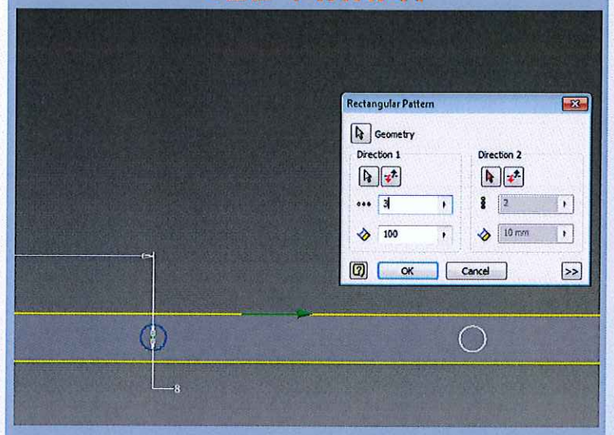

A 2D array ensured all of my screw holes were perfectly aligned.

3D FILLET

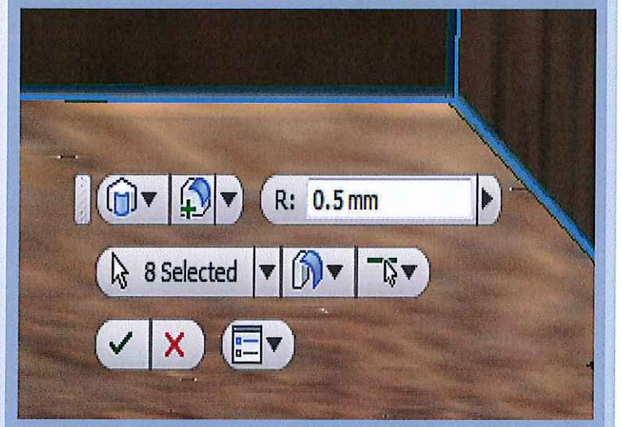

I applied a slight fillet to the drawer base to match the inside fillet of the drawer runners.

REVOLVE (ADD)

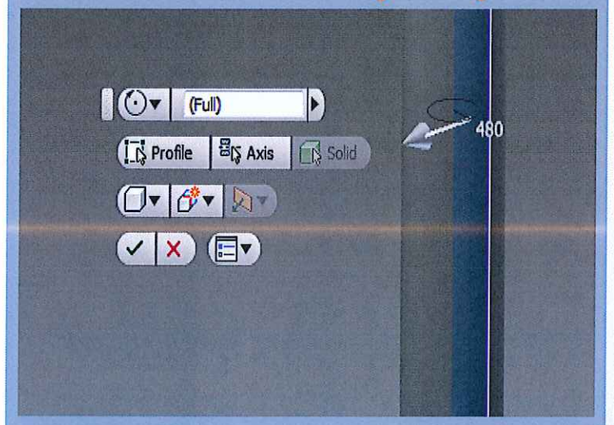

A 360 degree revolve was used to create the chrome pillars.

3D MIRROR

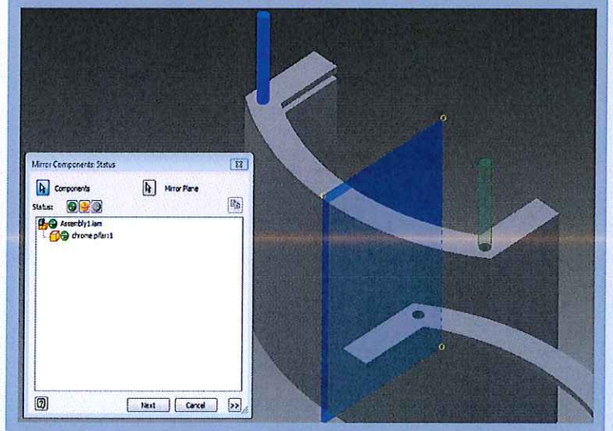

The mirror command was used several times in my design, as it is totally symmetrical.

SWEEP (SUBTRACT)

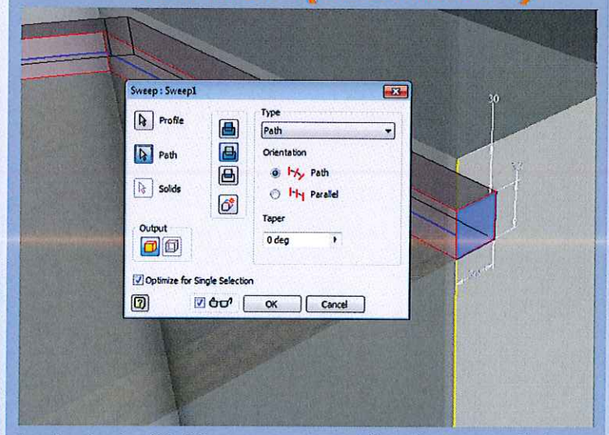

I extruded a 30x30mm square profile along a path to create the groove in my desk.

PROJECT GEOMETRY

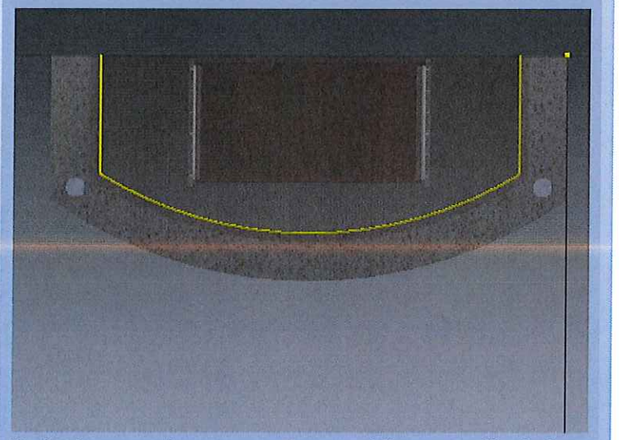

Project geometry was used several times, particularly for my sweep path.

PROMOTIONAL DISPLAY

CONCEPT DEVELOPMENTS

I have decided I want to make a floor-standing display to maximise the space for my informative graphic. The display will be flat-pack and slotted together, and could have multiple layers if desired.

1

Referencing at existing designs, I modelled a stand on a 3D CAD package, dimensioned to suit a realistic environment. My design is simple and effective, and will not take away from my chosen graphic

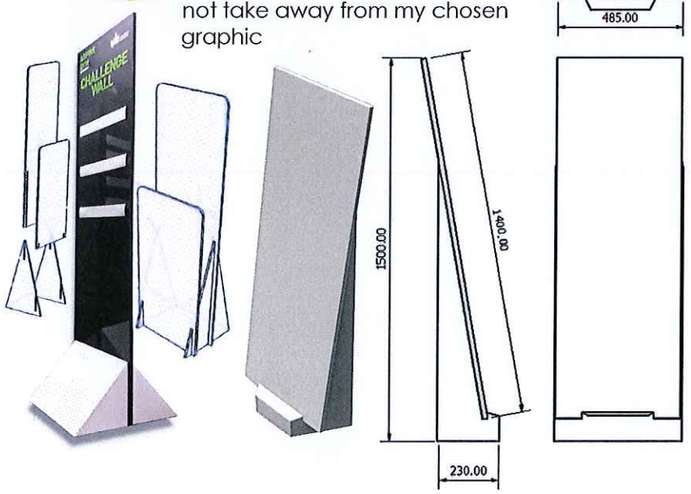

2

I created some refined concept sketches that can be developed further in a DTP package:

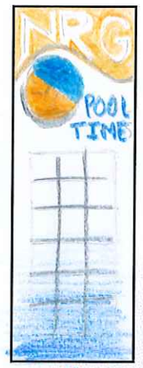

A

In my initial design, I incorporated a wave design, however at this stage the wave is too large and should be made more subtle in future variants. I do not like the asymmetry, and this layout is very basic as it lacks depth.

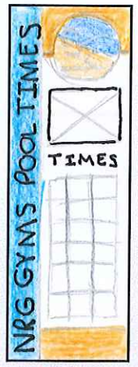

B

It made far more sense to place my heading vertically, when horizontally, the display is very narrow. The waves here clash with the straight edge of the text, which I will remove later. It would be more appealing to include a graphic.

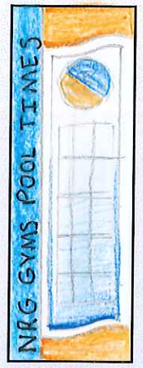

C

I have established a theme of straight vertical lines and wavy horizontal lines, which adds a very interesting contrast. The light blue NRG colour and the rippling waves suit the pool theme very well, staying relevant to the design.

3

DTP software allows far more development over my sketched ideas. I use this to advance my designs and create a final solution:

I experimented with a gradient effect to mimic the tones of water, which is subtle and effective. Layering helps to make the logo more dominant, an aspect which I must continue.

TOO PLAIN

The logo is pushed out of focus in this design, which I do not find effective. I liked the wave shape applied to graphics of the facilities, however I feel like the amount of text makes this layout too busy. The motion lines before the text make the page more active and appealing.

TOO BUSY

I have made the logo a more central focus using drop shadow, a flash bar and layering which makes it significantly more dominant. Two graphics makes the page less busy and more inviting to read, this is a far more successful balance than previously achieved.

BALANCED

4

FINAL SOLUTION

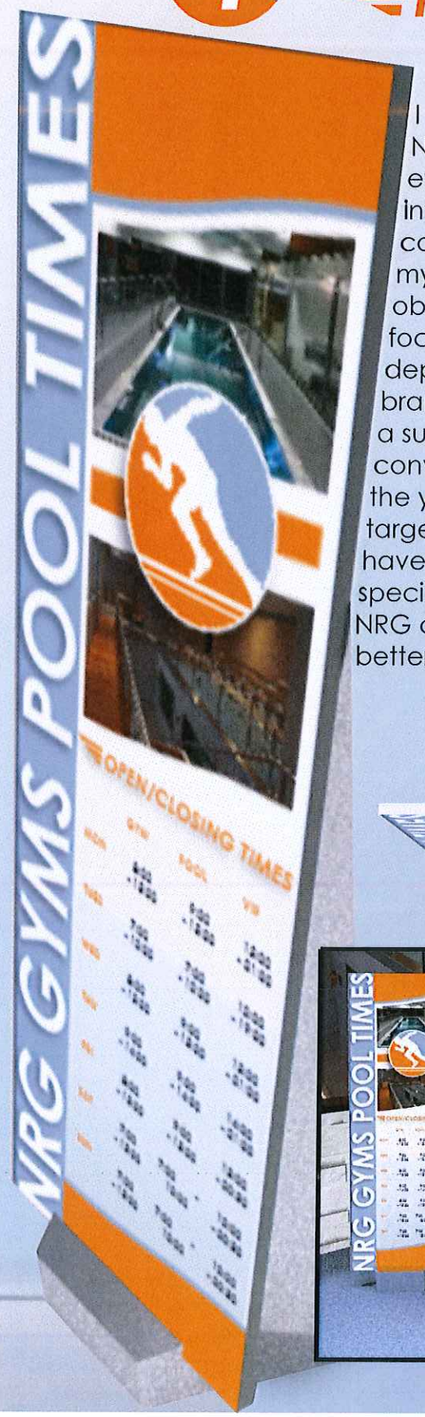

I feel that my solution for the NRG display stand has an effective balance of textual information and graphics. I continued the 'wavy' theme from my sketches which makes it obvious that this NRG facility focuses on swimming. The use of depth through layering makes the brand logo dominant, essential for a successful business. The waves convey motion which will draw in the younger, energetic target market expected. I have also retained the specified, gender neutral NRG colour scheme to better suit the brief.

RENDERED ENVIRONMENT
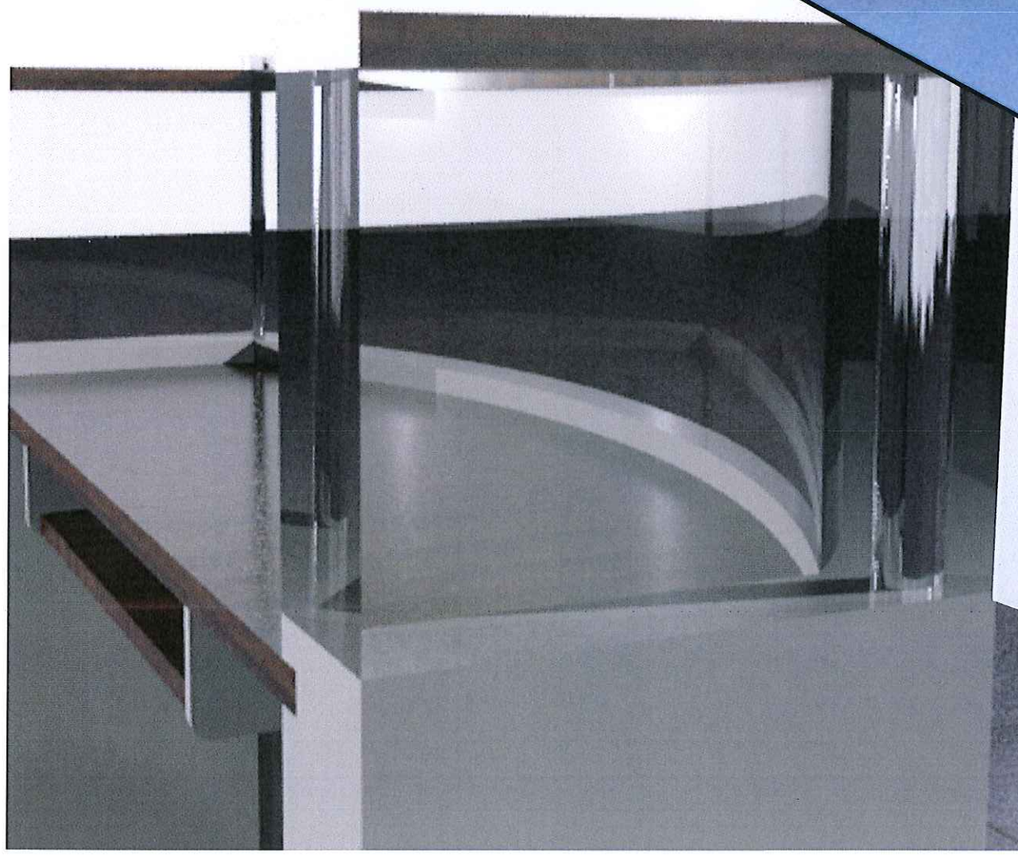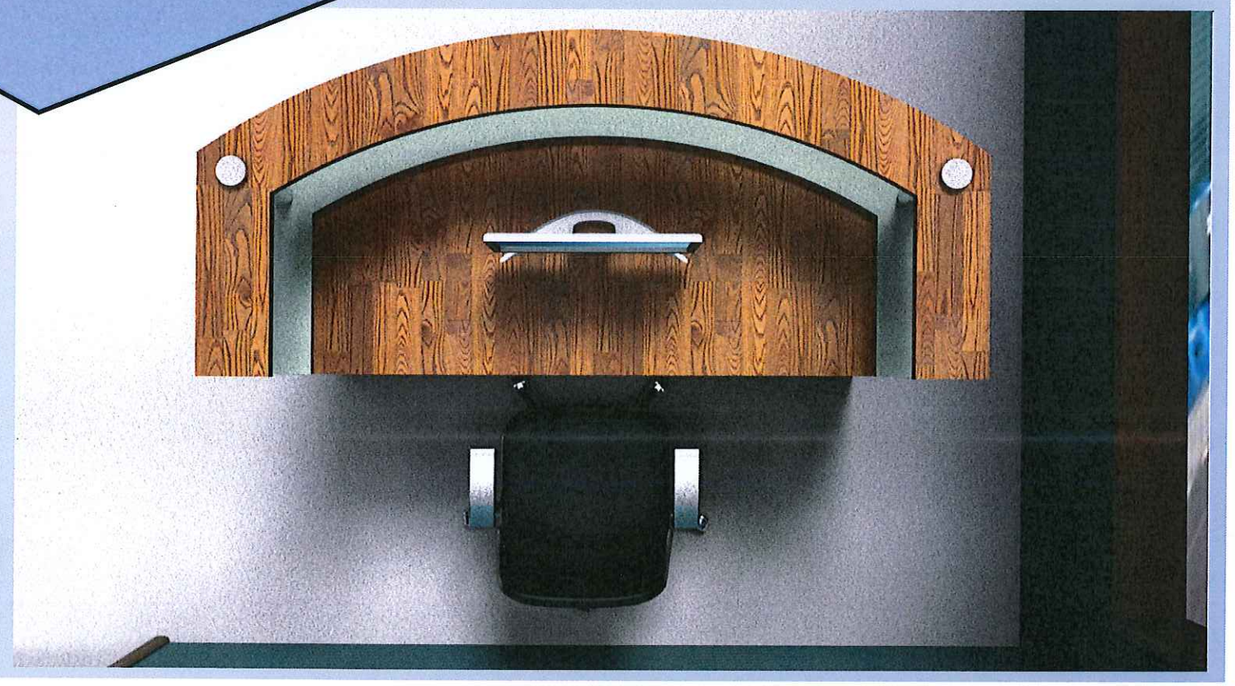
CAD RENDERINGS