AQUAJ

'Aqua J' is a new juice company arising on the competitive soft drinks market. They aim to sell a healthy fruit juice that appeals to 14-24 year olds. They want their bottle to convey a quirky fresh image as well as being sustainable, recyclable and reusable.

Inspiration

I Reasearched various healthy products and fruit that I can use to help me design a bottle that appeals to the target market.

Colour Theory

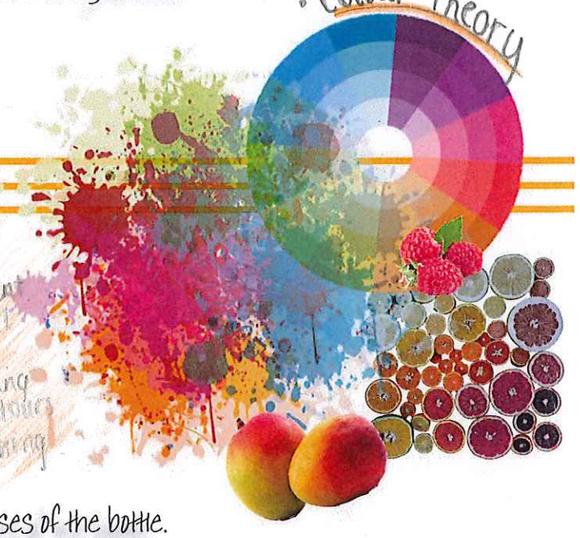

When I select colours for the promotional aspects of this assignment I will consider natural colours that associate with fruits also making use of contrasting colours to make it eye catching

Logos and Labels

I have considered various existing labels and logos that are eyecatching and stand out. I will analyze techniques that they have used and will consider them when designing my logo and table to create a visual impact.

I will utilise my skills gained in national 5 graphics in order to produce drawings for the design, manufacture and promotional purposes of the bottle.

I will produce the following pages...

1. **Design ideas** – 2D & 3D sketches – Rendering } To collect various ideas for the design, shape, size, style, colour and texture of the bottle

2. **Sketched Orthographics** – Dimensions – Technical Details } To look at the key features, detail, scale, sizes and function of components in the bottle design.

3. **Modelling plan** – 2D & 3D sketches – modelling techniques } To make sure the bottle is functional and achievable. Also to show the different procedures involved.

4. **CAD drawings** (3 Components) – Orthographics – Isometrics – Technical details – dimensions } To show how the components will be assembled, showing detail and dimensions to aid production.

5. **DTP (label)** – Thumbnails – Drawn visual – Colour } To create an eye catching brand label that will promote the product and make a visual impact.

Target Market

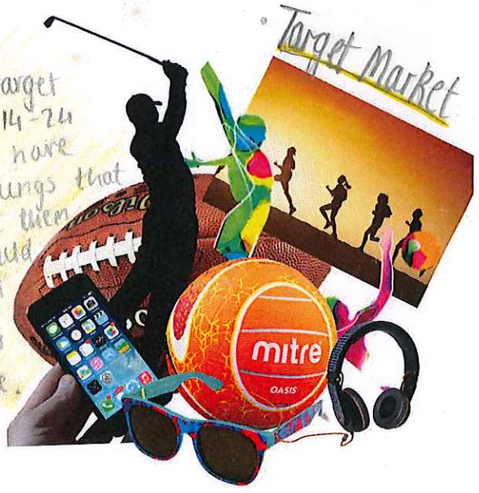

As my target market is 14-24 year olds I have researched things that may interest them. The bottle should represent this modern age-group with a fit & healthy style.

Nutritional Information

A bar code must be included to enable scanning and a QR code could be added to direct smart phone users to a website.

The drink must be healthy and therefore must have an info graphic on the label to back this up. It also should be sustainable and should include recycling info.

Bottle Design

There are a huge range of bottles on the market. Some are designed for different activities or target markets. My bottle must include a cap or spout to allow ease of drinking the bottle must also be comfortable to hold.

Rachel Crooks

AQUAJ

- I didn't like the style of the bottle provided and decided to design my own.
- My design must be modern, meet the brief and contain 3 component parts. However it also must be simple enough for me to construct on a CAD package.

Design Ideas

1

I also considered different cap designs but decided that #2 was the most unique and modern looking

2.

could be made from plastic -would act as a stopper in the bottle.

3.

The grip on this bottle would make holding fairy comfy. The slanted top takes a modern approach on the classic drink bottle shape.

I like the sleek shape that continuous up to the lid. It would be simple to create with the revolve tool.

I like the cap in this design acting like a plug it is a bit different yet simple enough to create. The sleek modernised design would appeal to the target market.

This unusually shaped bottle is quite pleasing to the eye. However construction may prove difficult

I like the unusual curved shape of this design. The sleek shape and finger cut-outs would make holding comfortable. It looks modernised therefore would appeal to the target market. however the shape may be awkward to create on inventor.

I like this design as the shape is unusual for a bottle, its a bit quirky and would attract the target market. however the angular shape may be too challenging to make on inventor

If I was to create a push/pull cap then I considered the following designs...

however I chose not to use them as I found them boring, not very modern.

final design

I decided on this shape as it can be created easily on inventor utilising the revolve tool. It is different and modern. It is easy to hold and the lid is a bit of a quirky twist on a classic design

AQUAJ

Planning Stage

Revolved Solid
Shell not required.

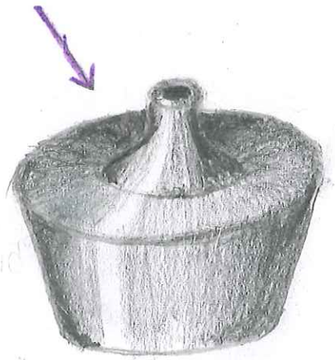

2. Cap & Spout

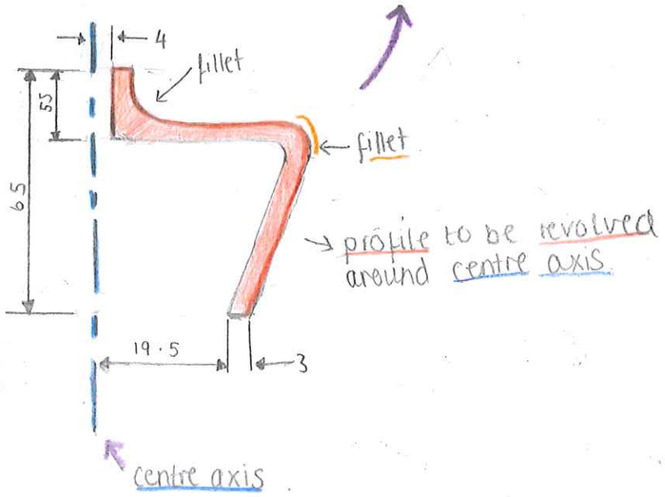

Centre axis

Profile will be revolved 360° around centre axis

fillet

1. Bottle

Select surface to be removed then, Shell 4mm.

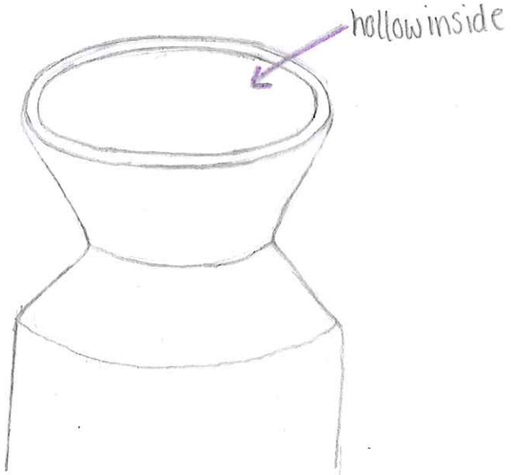

Centre axis

3. Lid

Profile will be revolved 360° around centre axis.

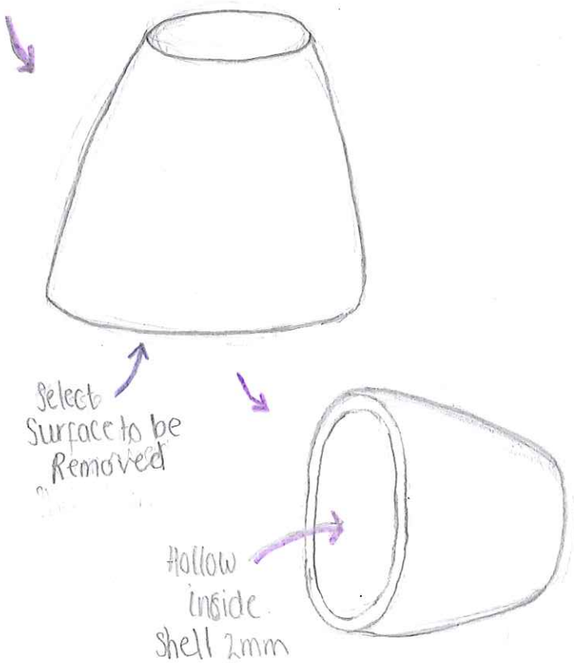

AQUA-T

Orthographic Sketches

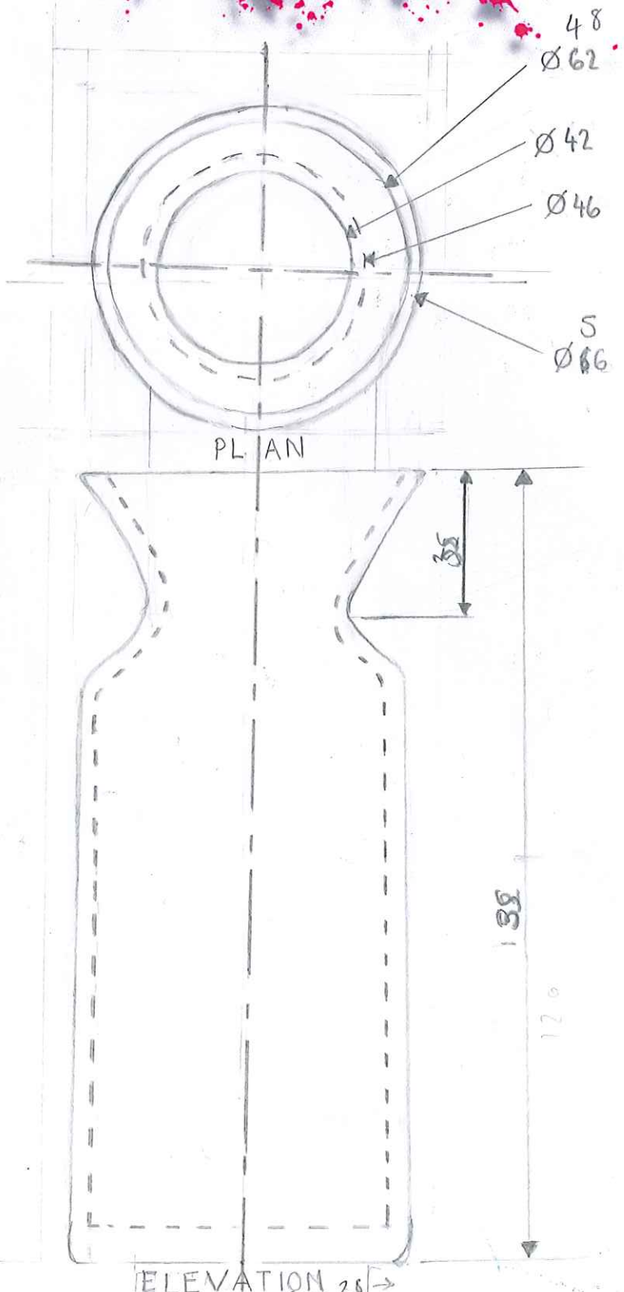

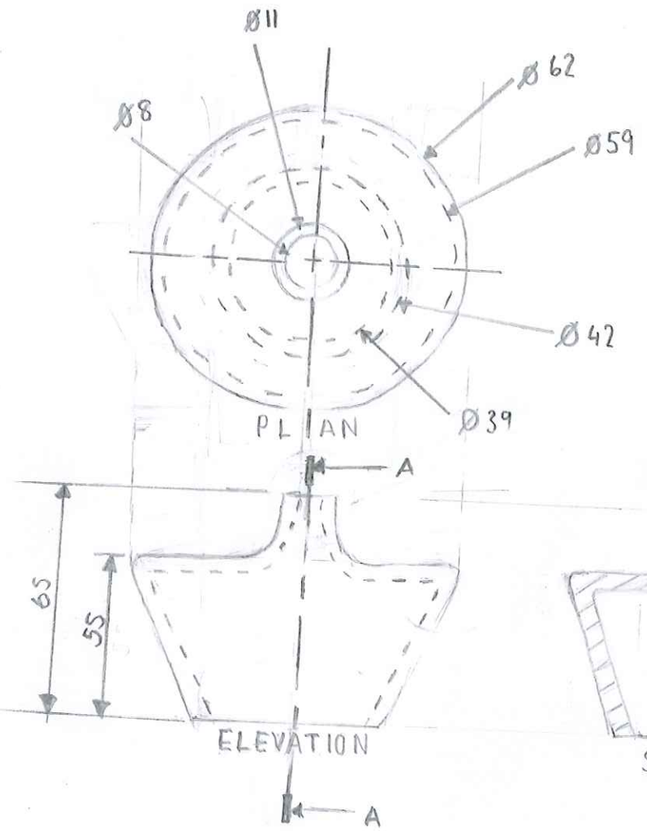

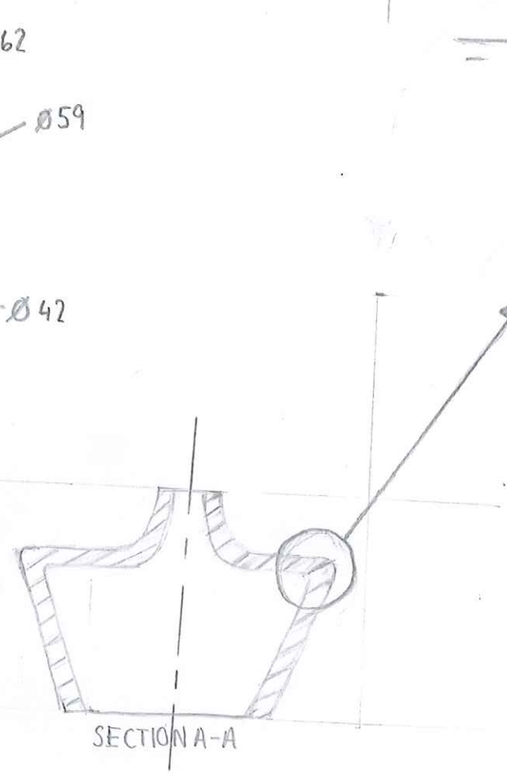

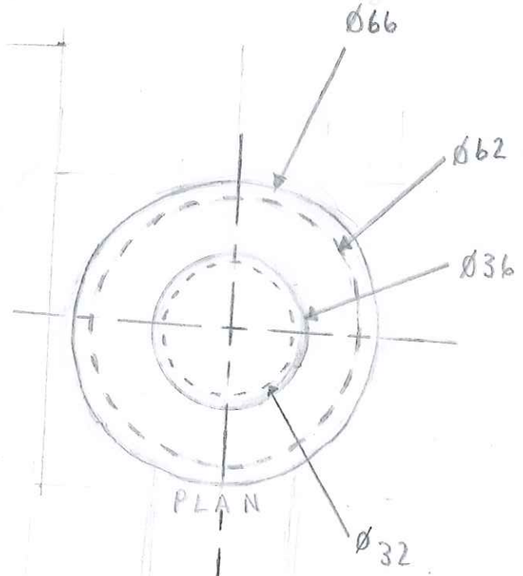

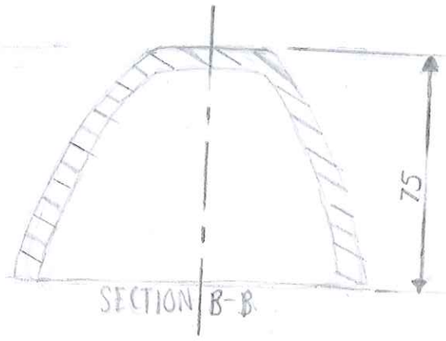

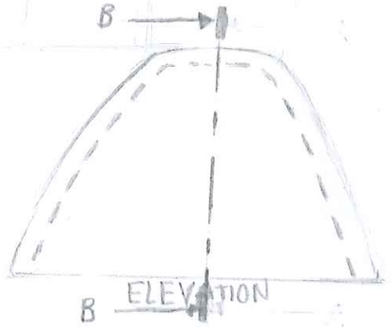

RACHEL CROOKS	AQUA-T BOTTLE
LESMAHAGOW HIGH SCHOOL	NOT TO SCALE
26/02/15	
ORTHOGRAPHIC SKETCH	

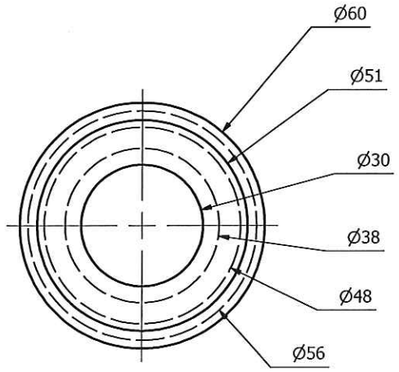

PLAN

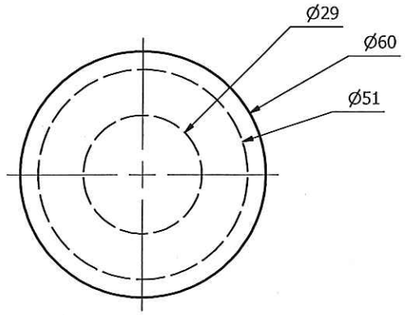

PLAN

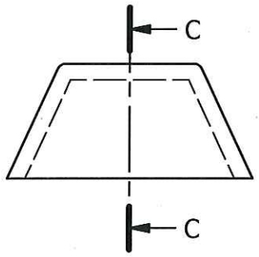

ELEVATION
SCALE 1: 1

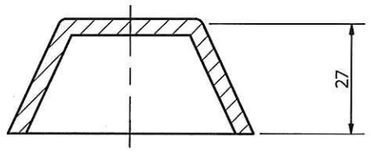

SECTION C-C
SCALE 1: 1

I ADDED SECTIONAL DRAWINGS TO CLEARLY SHOW THE INTERNAL STRUCTURE AND WALL THICKNESS OF EACH OF THE THREE PARTS.

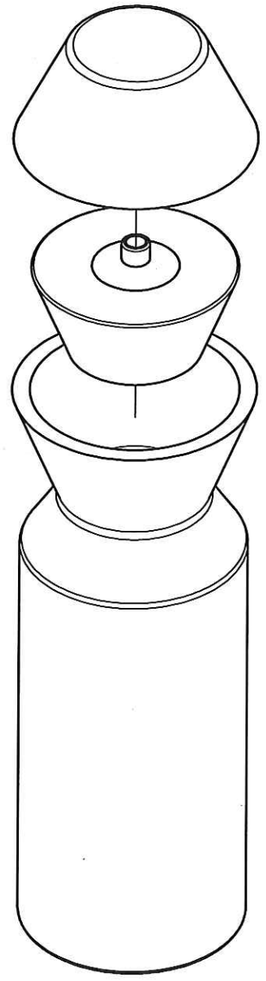

EXPLODED ISOMETRIC
SCALE 1: 1

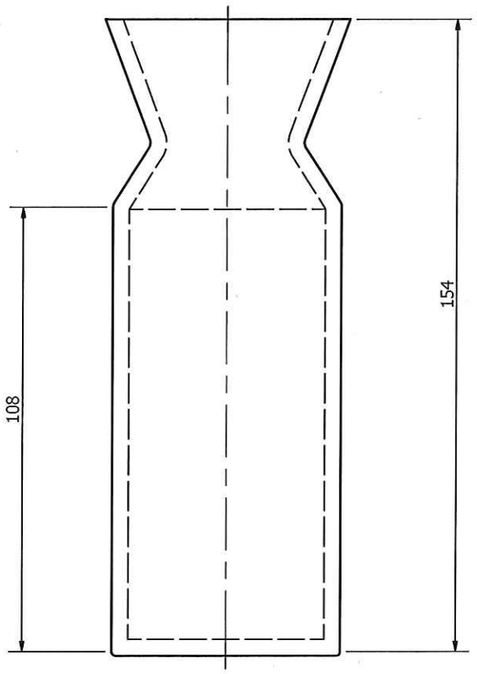

ELEVATION
SCALE 1:1

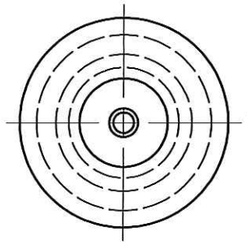

CAP PLAN
SCALE 1 : 1

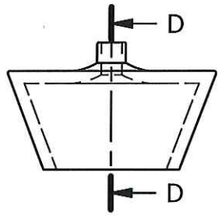

CAP ELEVATION
SCALE 1 : 1

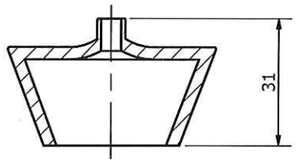

SECTION D-D
SCALE 1 : 1

RACHEL CROOKS	27/03/15	LESMAHAGOW HIGH SCHOOL	AQUA J	ORTHOGRAPHIC	SCALE 1:1	DIMENSION IN MM	3rd ANGLE PROJECTION

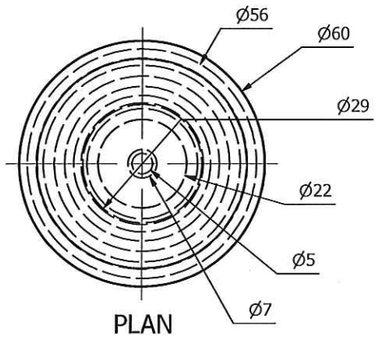

PLAN

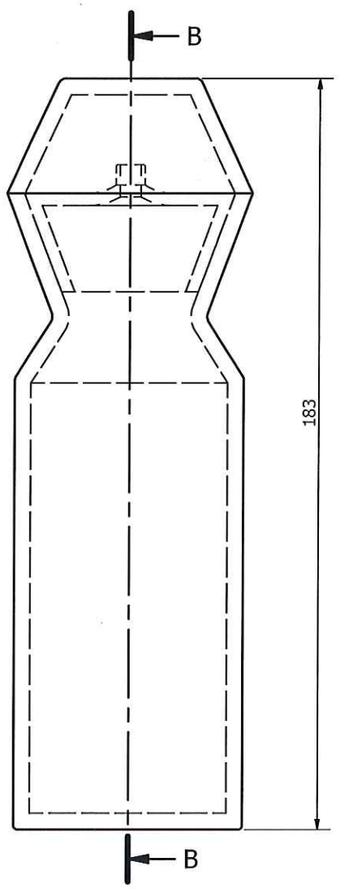

ELEVATION
SCALE 1: 1

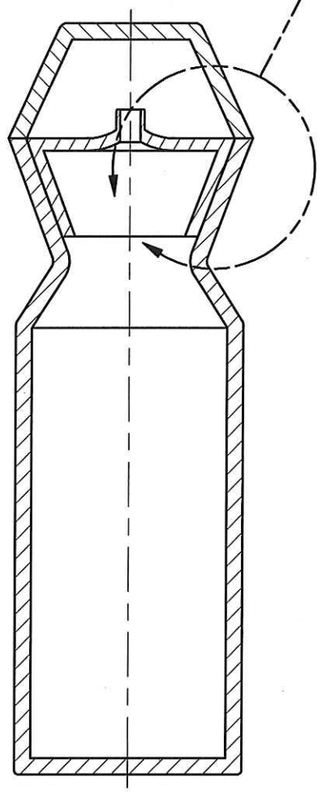

SECTION B-B
SCALE 1: 1

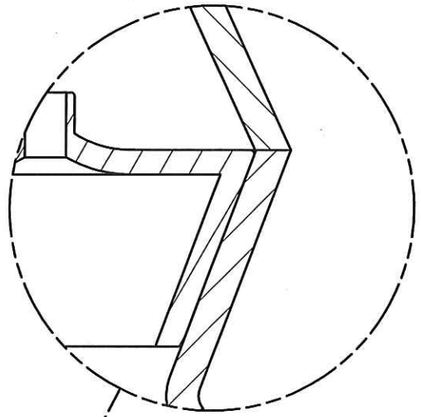

TECHNICAL DETAIL

I ADDED TECHNICAL DETAIL, AND SECTIONAL DRAWINGS IN ORDER TO SHOW HOW MY COMPONENTS ARE ASSEMBLED, THE INTERNAL STRUCTURE AND THE WALL THICKNESS OF EACH OF THE COMPONENTS.

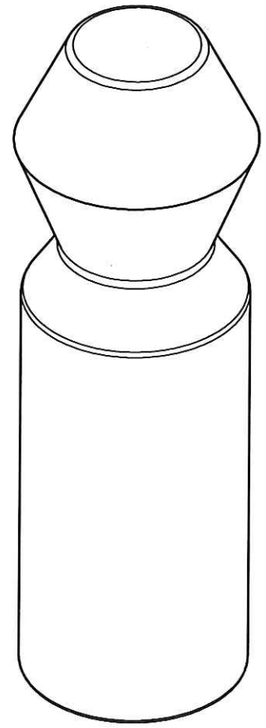

ASSEMBLED ISOMETRIC
SCALE 1: 1

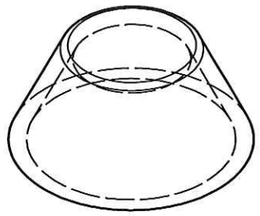

ISOMETRIC
SCALE 1: 1

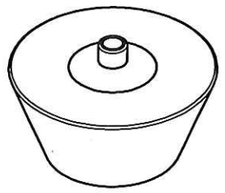

ISOMETRIC
SCALE 1: 1

RACHEL CROOKS	27/03/15	LESMAHAGOW HIGH SCHOOL	AQUA J	ORTHOGRAPHIC	SCALE 1:1	DIMENSION IN MM	3rd ANGLE PROJECTION

AQUA

Design Assignment

Rachel Crooks

AQUAJ

Analysis

- Target Market - active/healthy/sporty.
- Reusable / Recyclable Information
- Nutritional Information.
- Age - fourteen- twenty four

Theme

- Movement
- health
- fresh
- fruit
- sport.
- eye catching colour.
- Water.

The dimensions for my label are:
length: 176mm height: 50mm.

Thumbnails

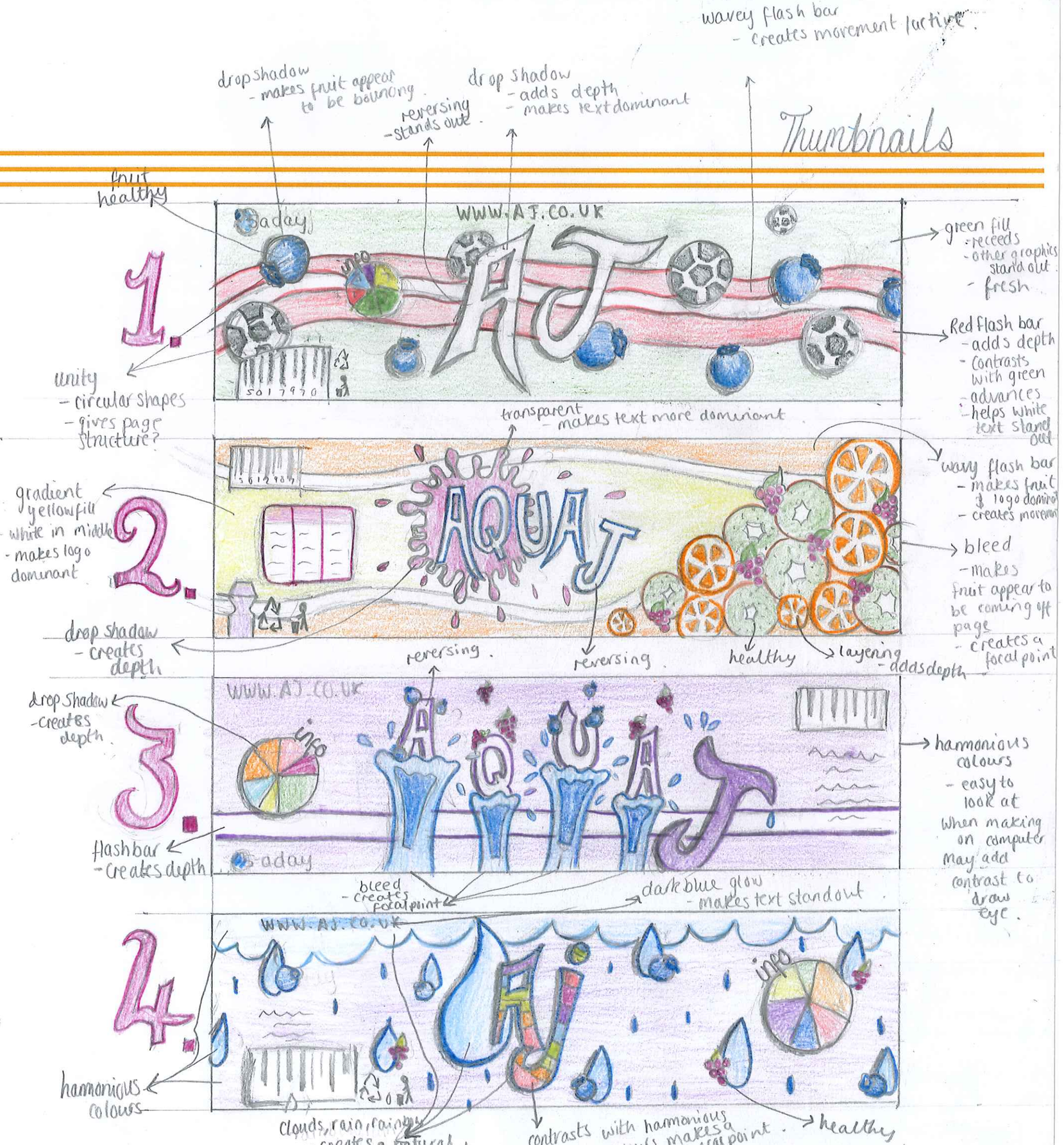

Resized to fit on page

1. I CHANGED MY 176X50 BLOCK YELLOW RECTANGLE BY ADDING A GRADIENT FILL. THE GRADIENT IN THE CENTRE HELPS THE LOGO IN THE MIDDLE OF THE LABEL TO STANDOUT AND BECOME MORE DOMINANT.

2. I CHANGED MY FLASH BARS FROM RECTANGLES TO WAVES AND ADDED A DROP SHADOW TO ALLOW THEM TO STAND OUT FROM THE YELLOW BACKGROUND. THE CURVES REFLECT JUICE AND CREATES MOVEMENT. I CHOSE ORANGE AS IT HARMONISES WITH THE YELLOW BACKGROUND AND CREATES UNITY WITH THE ORANGE IMAGES.

Aqua AQUA

3. I CHANGED THE FONT FROM Times New Roman TO MISTER SIRLOIN BTN RARE. I ADDED A WHITE FILL TO CREATE REVERSING AND ALLOWS IT TO STAND OUT. DRAWING YOUR ATTENTION TO IT. I THEN ADDED COLOURED OUTLINES TO CONTRAST WITH THE OTHER COLOURS IN THE LABEL MAKING THE LOGO POP OUT FROM THE PAGE. I ALSO ADDED A DROP SHADOW WHICH AIDS THE DOMINANCE.

J J

4. I CHANGED THE FONT TO DILLENIA UPC TO CONTRAST WITH THE REST OF THE LOGO.
I TILTED THE 'J' AND ADDED A COLOURED FILL AND WHITE OUTLINE TO MAKE IT CONTRAST WITH THE OTHER LETTERS. THE WHITE OUTLINE HELPS IT STAND OUT ALONG WITH THE DROP SHADOW THAT I ALSO ADDED TO CREATE DEPTH.

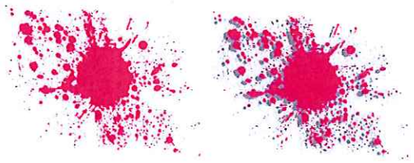

5. THE SPLASH IS AN IMPORTED GRAPHIC WHICH I ADDED TO THE LOGO TO MAKE IT LOOK LIKE JUICE.
I ALSO ADDED A DROP SHADOW TO CREATE DEPTH

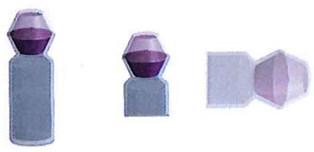

6. I CROPPED THE IMAGE OF MY BOTTLE MAKING IT BLEED OFF THE PAGE. THIS WILL CREATE A FOCAL POINT WHEN MY LABEL IS WRAPPED AROUND THE BOTTLE.
I ALSO MADE ONE TRANSPARENT AND PUT IT NEXT TO MY BEHIND MY NUTRITIONAL INFO TO DRAW ATTENTION TO BOTTLE WHEN READING THE INFORMATION.

7. I IMPORTED THIS GRAPHIC FROM THE INTERNET AND ADDED A WHITE GLOW TO MAKE IT STAND OUT MORE AGAINST THE YELLOW.

www.aquaj.co.uk WWW.AQUAJ.CO.UK

8. I CHANGED MY WEB ADDRESS FONT FROM TIMES NEW ROMAN TO MISTER SIRLOIN BTN RARE TO CREATE UNITY WITH THE LOGO.
I CHANGED THE COLOUR TO PINK TO ALSO CREATE UNITY WITH THE SPLASH. I THEN ADDED A GLOW AS THE PINK TEXT SEEMED TO GET LOST ON THE PAGE WITHOUT IT.

9. I IMPORTED THIS GRAPHIC FROM THE INTERNET AS I LIKE THE CLOUD ON THE BAR CODE. IT CREATES A NATURAL FEEL AS IT REPRESENTS NATURE.
I THEN ADDED A DROP SHADOW TO CREATE DEPTH.

Nutritional Info

Energy	45 kcal
Protein	0.5g
Carbohydrates	13.1g
Fat	0.1g
Vitamin C	25mg

NUTRITIONAL INFO

Energy	45 kcal
Protein	0.5g
Carbohydrates	13.1g
Fat	0.1g
Vitamin C	25mg

10. I CHANGED THE TEXT FONT TO MISTER SIRLOIN BTN RARE TO CREATE UNITY WITH THE LOGO AND THE WEB ADDRESS. THEN ADDED A GLOW AND MADE IT BOLD TO DRAW THE EYE.

11. I CHANGED THE FONT TO BLUE RIDGE LIGHT IN ORDER TO CREATE A CONTRAS WITH THE OTHER FONTS AND DRAWS THE EYE AS THIS IS IMPORTANT INFORMATION

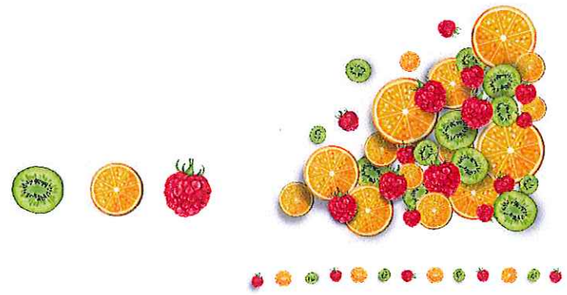

12. -I USED THE FRUIT IMPORTED GRAPHICS FROM THE INTERNET AND COPIED PASTED AND ROTATED THEM. I THEN LAYERED AND GROUPED THEM IN THE SHAPE OF A WAVE THIS CREATES THE IDEA OF JUICE AND MOVEMENT. I ADDED A DROP SHADOW FOR DEPTH.
-I THEN GROUPED SOME MORE IN A WAVE ALONG THE FLASH BAR TO CREATE A HEALTHY FEEL TO THE PAGE.
- I THEN GROUPED THE ORANGE AND RASPBERRY AND ADDED TRANSPARENCY TO CREATE A BACKGROUND FOR THE NUTRITIONAL INFORMATION TO DRAW THE EYE

13. I IMPORTED A RECYCLING GRAPHIC FROM THE INTERNET TO PROMOTE SUSTAINABILITY.
I THEN CHANGED THE COLOUR FROM RED TO PINK TO FIT IN WITH MY THEME.

14. I IMPORTED THIS GRAPHIC FROM THE INTERNET TO ENSURE CONSUMERS PUT THE EMPTY BOTTLE IN THE BIN.